OS-1 LED / OS-1 LED LITE

- **protection degree:** IP66 for the optical part and driver
- **insulation class:** II
- **supply voltage:**
  220-240 V AC, 50/60 Hz (OS-1 LED)
  100-240 V AC, 50/60 Hz (OS-1 LED LITE)
- **light source:** CREE XT-E
- **material:** polypropylene with UV resistant glass fiber
- **colour:** black
- **mounting:** upwards or downwards
- **installation:** on poles type S, SP with spigot ending B, on arms system, wall brackets KR, KP, extension arms, aluminium and steel wall brackets with spigot Ø60 and length 60 mm
- **recommended mounting height:** 4-5 m
- luminaire is adapter to work in temperatures between -40 C and +40 C

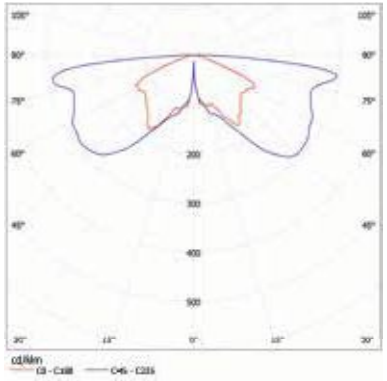

Light distribution curve for luminaire OS-1 LED

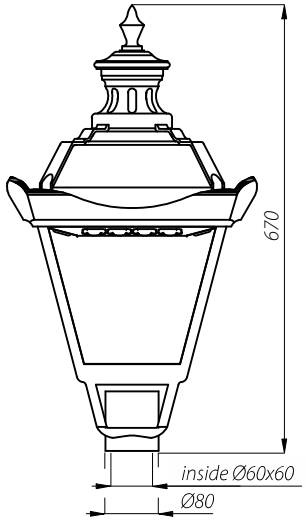

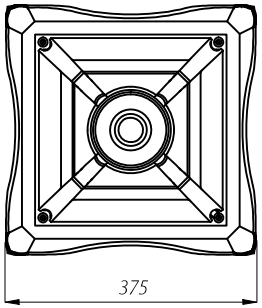

Luminaire OS-1 LED
on pole S-31W
with height of 3,32 m

Name	The colour temperature of ligh [K]	Code	Power / Number of LEDs [W / pcs.]	Total power [W]	Luminous flux [lm]*	Lighting efficiency [lm/W]	Weight [kg]	Current product card
OS-1 LED	5 000	211331/6	32/16	39	2 850	72	5,2	
	3 500	211331/3						
OS-1 LED LITE	5 000	211332/6	36/16	42	3 200	76	5,2	
	3 500	211332/3						

** due to the LED precision class the tolerance value for OS-1 LED is +/-3%, for OS-1 LED LITE is +/- 7%*

OS-1 LED / OS-1 LED LITE

Pszczyna / Poland

ending

cap

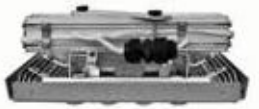

support plate with LED module and driver

luminaire body