PARK LIGHTING / PARK LUMINAIRES

LUMINAIRE OZ

- **protection degree:** IP44
- **insulation class:** II
- **material:** polyamide with glass fibre
- **colour:** black
- **mounting:** only upwards
- **assembly:** on columns, extension arms, aluminium and steel wall brackets with spigot ending Ø60 mm and length 70 mm (OZ 400) and on poles type S and SP with ending specially adapted for OZ luminaire.
- diameter of luminaire neck Ø180 mm

Luminaire OZ 400

locking handle
feeder cable

ceramic lamp E-27

Luminaire OZ 400, lamp diffuser Klio white Ø400

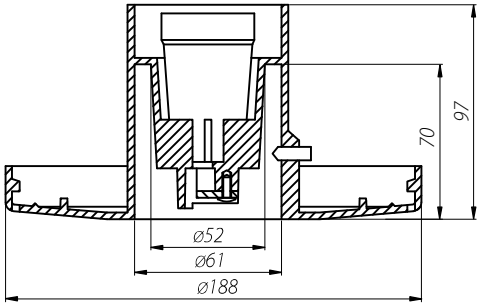

Luminaire OZ-400

Luminaire OZ 400, lamp diffuser Sphere white Ø400

Name	Code	Light source	Power [W]	Weight [kg]	Type of lamp diffuser
OZ 400	211415	Energy-efficient source E-27	23	0,35	Sphere Ø400, Atlanta Ø400, Klio Ø400